ITEM NO.	PART NUMBER	DESCRIPTION	QTY.	COMPONENT NOTES
1	50-00057	Connector, dc jack, 3.5x1.35xL16.5 mm, molding style	1	
2	50-00056	Connector, dc plug, 3.5x1.35xL20mm, molding style, spring contacts	3	
3	30-00003	Wire, 2C BC, 24 AWG, UL2468, 300V, 80C, 3.6 mm, VW-1, PVC, 76A	4	
4	24-00005	Overmold, PVC	1	black
5	24-00186	Overmold, splitter, Ø 8.0 mm by 10.0x18.0 mm	1	black
6	24-00002	Overmold, PVC	3	black
7	PCB	Splitter PCB, FR4, two-layer, tin, 13.0x13.0x1.6 mm	1	

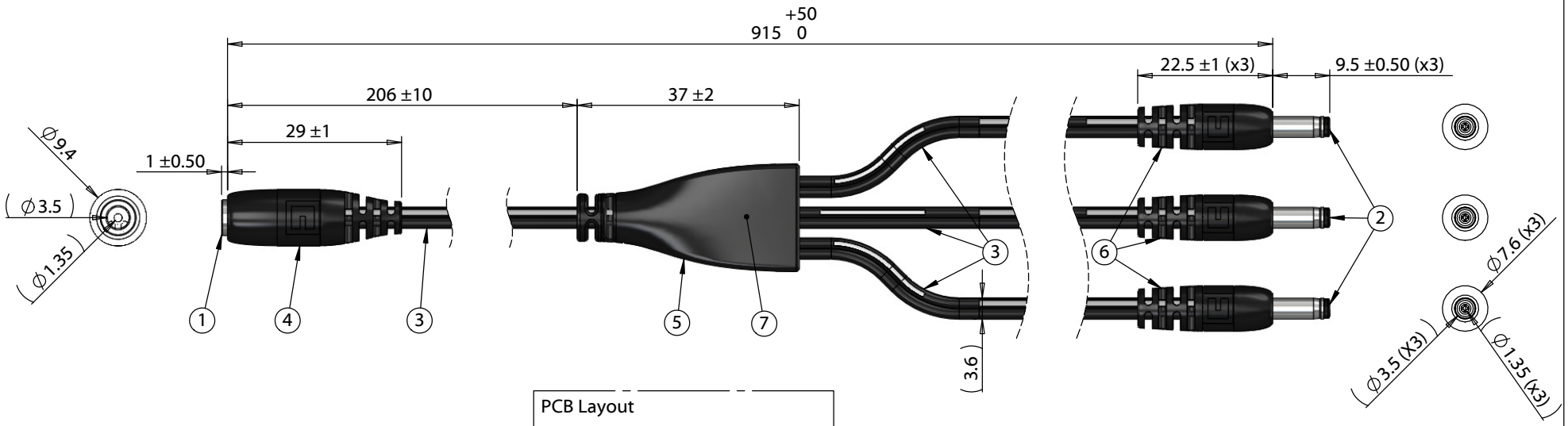

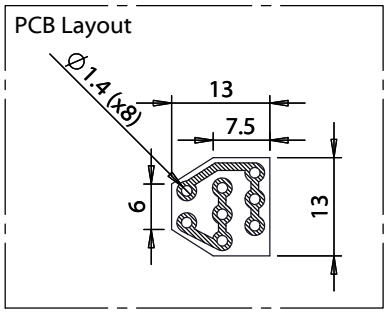

Notes:
Functionally equivalent components may be substituted

Wiring Diagram		
50-00057	wire color	50-00056
center	black with stripe	center
sleeve	black	sleeve

Revision:	Date:	Description:
A	4/13/2018	Initial release

Prepared: JP — Digitally signed by JP Date: 2018.04.13 16:26:03 -07'00'

Verified: AW — Digitally signed by AW Date: 2018.04.16 15:44:06 -07'00'

Dimensions are in millimeters.
Tolerances:
X: ± 0.5 mm
X.X: ± 0.3 mm
X.XX: ± 0.05 mm

Notes:

RoHS and REACH compliant

Function test: no open, no short circuit, no intermittent

Description:

Cable, 915 mm, 3.5x1.35 mm 50-00057 dc jack to y-split to 3x 3.5x1.35x9.5mm 50-00056 dc plug, 24 AWG

TENSILITY
tel 1.541.323.3228 800 877.670.7118
fax 1.541.323.4202 web tensility.com

Size: A
Part number: 10-02786
Scale: 1:1
Sheet 1 of 1

To see a custom version of this cable assembly, call Tensility at 541-323-3228 or email engineering@tensility.com

5 4 3 2 1