THIS COPY IS PROVIDED ON A RESTRICTED BASIS AND IS NOT TO BE USED IN ANY WAY DETRIMENTAL TO THE INTERESTS OF PANDUIT CORP.

PANDUIT PART NO.	WEIGHT
LDW5	1.8 LB/100 PCS (535 g/100 PCS)

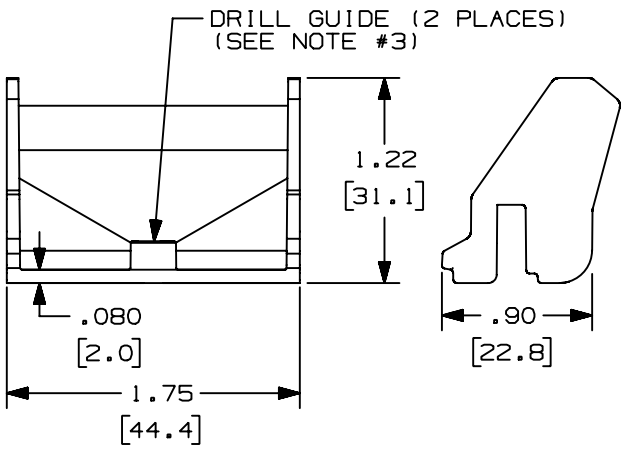

NOTES:
1. SEE CURRENT CATALOG FOR ADDITIONAL PART NUMBER SUFFIXES TO INDICATE COLOR AND OR PACKAGE QUANTITY.
2. THE LDW5 TOOL IS USED WITH LDP5 AND LD2P5 RACEWAYS.
3. THIS PART IS USED AS A DRILL GUIDE AND HOLDS COVER OPEN IN WIRE INSTALLATION.
   A DIAMETER OF DRILL GUIDE IS .11 AND ACCOMMODATES A #6 SCREW.
4. DIMENSIONS IN PARENTHESES ARE IN METRIC.

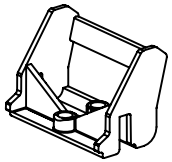

REV	DATE	BY	CHK	DESCRIPTION	ECN	CHK	CUST	SUP
1	03-13-97	JBA	CEF	A. REV'D NOTE #3 TO SHOW DIA. OF DRILL GUIDE AND SCREW SIZE.	35012-09	CEF	CEF	
R	12-20-95	DW	CEF	RELEASED TO PRODUCTION.	35012-09	CEF		

CAD FILENAME/LAYERS: D35012BI_LDW5_WEDGE_01.PRT

PANDUIT CORP. TINLEY PARK, ILLINOIS

LDP5 AND LD2P5 INSTALLATION WEDGE TOOL (LDW5)
CUSTOMER DRAWING

UNLESS OTHERWISE SPECIFIED, DIMENSIONAL TOLERANCES ARE:
(.X) ± (.XXX) ±.010 [.4]
(.XX) ±.03 [.8] ANGLES ±

UNLESS OTHERWISE SPECIFIED, ALL DIMENSIONS ARE GIVEN IN INCHES, THIRD ANGLE PROJECTION.

DRAWN BY: DW
MAT'L: POLYCARBONATE
SCALE: NONE
DATE: 12-20-95
DRAWING NO.: 35012-09
DWG SIZE: A
CHECKED BY: CEF